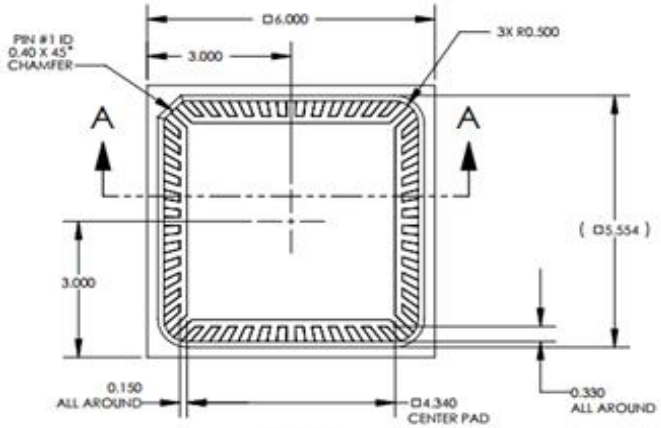

TOP VIEW

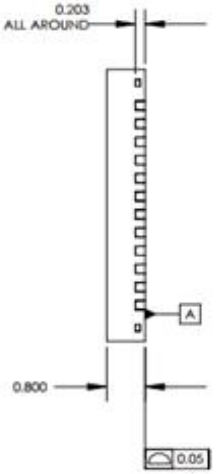

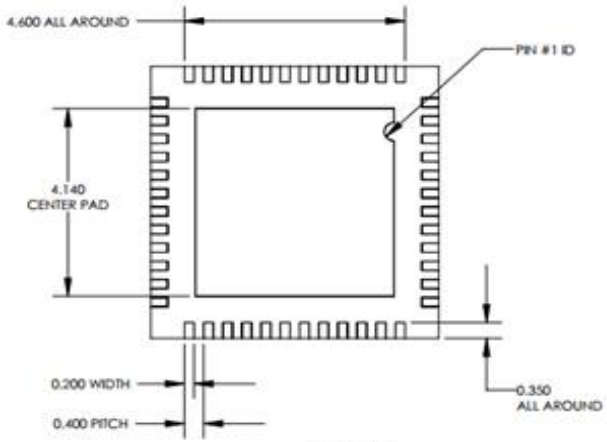

BOTTOM VIEW

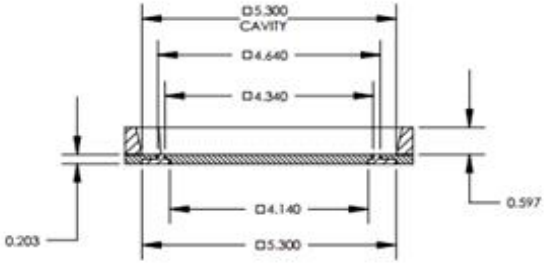

SECTION A-A

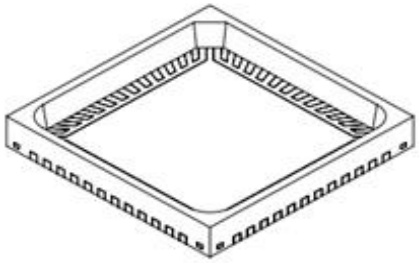

NOTES

1. MATERIALS:
   LEAD FRAME: COPPER 194FH, THK = 0.203±0.008
   BODY: SEMICONDUCTOR MOLDING EPOXY, CONTACT QPTECHNOLOGIES FOR DETAILS.

2. FINISH:
   LEAD FRAME: ELECTROLESS NICKEL PER MIL-C-26074, CLASS 1,
   200 TO 300 MICROINCHES (2.5um-7.6um) THICK,
   GOLD PLATE PER MIL-G-45204, TYPE 3, GRADE A, CLASS 1
   (40 TO 80 MICROINCHES (1um-2um) THICK).
   BODY SURFACE FINISH: VDI 21-24 (1.12-1.6 Ra)

3. PACKAGE MISMATCH: BODY OFFSET FOR LEAD FRAME = 0.076mm MAX.

4. UNLESS OTHERWISE SPECIFIED, RADIUS ON ALL MOLDED EDGES AND CORNERS = 0.25mm MAX.

5. PACKAGE CONFORMS TO JEDEC MO-220

PROPRIETARY AND CONFIDENTIAL
THE INFORMATION CONTAINED IN THIS DRAWING IS THE SOLE PROPERTY OF QPTECHNOLOGIES. ANY REPRODUCTION, IN PART, OR AS A WHOLE WITHOUT THE WRITTEN PERMISSION OF QPTECHNOLOGIES IS PROHIBITED.

NEXT ASSY	USED ON
APPLICATION	

UNLESS OTHERWISE SPECIFIED:
DIMENSIONS ARE IN MILLIMETERS
TOLERANCES ARE:
ANGULAR: ±0.5 degree
.X = ±0.76 .XX: ±0.25
.XXX = ±0.13 .XXXX = ±0.01

MATERIAL: SEE NOTE 1
FINISH: SEE NOTE 2
DO NOT SCALE DRAWING

	NAME	DATE
DRAWN	D. Abbe	8/5/11
CHECKED	S. Swan	8/5/11
ENG APPR.	S. Swan	8/5/11

COMMENTS:

TITLE: QP-QFN48-6MM-0.40MM

SIZE	DWG. NO.	REV
B	500391	A

SCALE: 10:1 WEIGHT: SHEET 1 OF 1